HC3500P03H

Hybrid Coupler 3 dB, 90°

Rev A1

Description

The products are widely used in China and global 4G/5G base station, 5G network coverage, BeiDou navigation antenna, vehicle-mounted high-precision navigation (unmanned) antenna and other applications. The products have miniaturization, low-loss, wide-bandwidth, high power density, high reliability, high cost-effective and other competitive advantages.

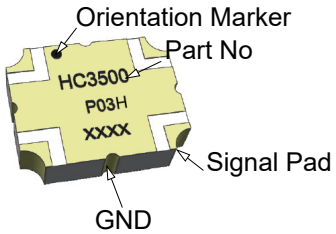

Features:

- 3300-3800 MHz
- Low Insertion Loss
- Tight Amplitude Balance
- High Isolation
- Low VSWR
- Good Repeatability
- CTE compatible with FR4, G-10, RF-35, RO4350B and polyimide
- Immersion gold, prevent surface oxidation & scratch
- RoHS Compliant
- Tape & Reel Package available

Electrical Specifications

Frequency	Isolation	Insertion Loss	VSWR	Amplitude Balance
MHz	*dB Min*	*dB Max*	*Max : 1*	*dB Max*
3300 - 3800	20	0.30	1.28	± 0.3

Phase Balance	Power	Operating Temp.
Degrees	*Avg. CW Watts*	*°C*
90 ± 4.0	50	-55 to +125

Notes:
1. All the above data are based on specified demo board.
2. Insertion loss:Thru board loss has been removed.

Mechanical Outline

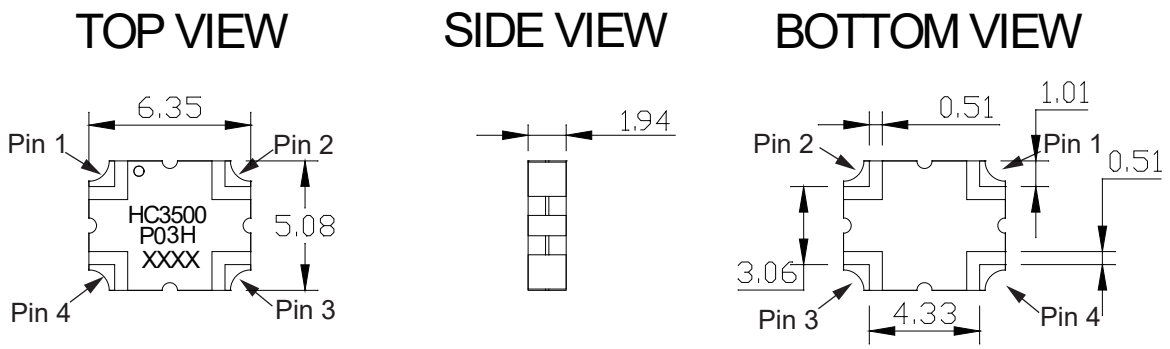

Notes: 1. All dimensions show in millimeters
2. RoHS Compliant in accordance with EU Directive(2011/65/EU)
3. Dimension tolerance: ±0.20

Yantel Corporation

Add: 3F, Building 3, Southern District 2 of Zhongguan Honghualing Industrial Park, Xili, Nanshan, Shenzhen, China
Tel: 86-755-8355-1886 Fax: 86-755-8355-2533
For detailed performance specs & shopping online see Yantel web site : www.yantel-corp.com

HC3500P03H

Hybrid Coupler 3 dB, 90°

Rev A1

Hybrid Coupler Pin Configuration

The HC3500P03H has an orientation marker to denote Pin1. Once port one has been identified the other ports are known automatically. Please see the chart below for clarification:

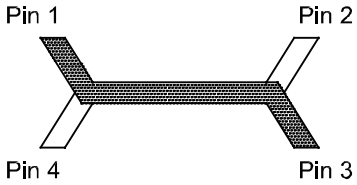

Configuration	Pin 1	Pin 2	Pin 3	Pin 4
Splitter	Input	Isolated	-3dB $\angle\theta-90$	-3dB $\angle\theta$
Splitter	Isolated	Input	-3dB $\angle\theta$	-3dB $\angle\theta-90$
Splitter	-3dB $\angle\theta-90$	-3dB $\angle\theta$	Input	Isolated
Splitter	-3dB $\angle\theta$	-3dB $\angle\theta-90$	Isolated	Input
***Combiner**	A$\angle\theta-90$	A$\angle\theta$	Isolated	Output
***Combiner**	A$\angle\theta$	A$\angle\theta-90$	Output	Isolated
***Combiner**	Isolated	Output	A$\angle\theta-90$	A$\angle\theta$
***Combiner**	Output	Isolated	A$\angle\theta$	A$\angle\theta-90$

*Note: "A" is the amplitude of the applied signals. When two quadrature signals with equal amplitudes are applied to the coupler as described in the table, they will combine at the output port. If the amplitudes are not equal, some of the applied energy will be directed to the isolated port.

Typical Performance Data (@25℃)

Frequency (MHz)	Coupling (dB)	Transmission (dB)	Insertion Loss (dB)	Isolation (dB)	Amplitude Balance (dB)	Phase (degree)	Return Loss(dB)			
							S11	S22	S33	S44
3300	-3.15	-2.93	-0.03	-28.24	-0.12	92.09	-31.71	-23.98	-31.27	-24.49
3325	-3.15	-2.94	-0.03	-28.13	-0.11	92.14	-30.39	-23.76	-30.99	-24.26
3350	-3.13	-2.96	-0.04	-28.66	-0.09	92.18	-28.93	-24.30	-30.34	-24.56
3375	-3.12	-2.96	-0.03	-28.49	-0.08	92.14	-28.93	-24.46	-29.75	-24.96
3400	-3.11	-2.97	-0.03	-28.67	-0.07	92.19	-29.06	-24.51	-29.54	-25.08
3425	-3.11	-2.99	-0.04	-28.75	-0.06	92.20	-27.32	-24.29	-28.51	-25.14
3450	-3.10	-3.00	-0.04	-28.46	-0.05	92.28	-26.46	-24.55	-27.71	-25.28
3475	-3.10	-3.01	-0.05	-28.57	-0.04	92.30	-26.14	-24.91	-27.12	-25.97
3500	-3.08	-3.02	-0.04	-28.78	-0.03	92.32	-25.75	-24.71	-26.73	-26.44
3525	-3.08	-3.04	-0.05	-28.33	-0.02	92.24	-24.85	-24.73	-26.03	-26.19
3550	-3.08	-3.05	-0.05	-27.99	-0.02	92.18	-24.06	-24.91	-25.46	-25.77
3575	-3.08	-3.07	-0.06	-27.87	0.00	92.22	-23.68	-24.99	-25.07	-26.35
3600	-3.08	-3.08	-0.07	-27.65	0.00	92.17	-23.59	-24.80	-24.54	-27.27
3625	-3.09	-3.09	-0.08	-27.70	0.00	92.02	-23.01	-24.54	-23.60	-26.97
3650	-3.09	-3.10	-0.08	-27.02	0.01	92.03	-22.73	-24.40	-23.07	-26.47
3675	-3.07	-3.09	-0.07	-26.55	0.01	91.93	-22.55	-24.47	-22.92	-26.62
3700	-3.07	-3.09	-0.07	-26.26	0.01	91.93	-22.45	-24.53	-22.49	-27.21
3725	-3.08	-3.10	-0.08	-25.97	0.01	91.84	-21.87	-24.27	-21.84	-27.45
3750	-3.09	-3.11	-0.09	-25.37	0.01	91.73	-21.21	-23.97	-21.38	-26.73
3775	-3.11	-3.10	-0.09	-24.98	-0.01	91.77	-20.99	-23.49	-21.06	-26.34
3800	-3.11	-3.09	-0.09	-24.82	-0.01	91.82	-20.71	-23.32	-20.72	-26.87

Yantel Corporation

Add: 3F, Building 3, Southern District 2 of Zhongguan Honghualing Industrial Park, Xili, Nanshan, Shenzhen, China
Tel: 86-755-8355-1886 Fax: 86-755-8355-2533
For detailed performance specs & shopping online see Yantel web site : www.yantel-corp.com

HC3500P03H

Hybrid Coupler 3 dB, 90°

Rev A1

Typical Performance (-55°C,25°C,95°C,125°C: 3300-3800 MHz)

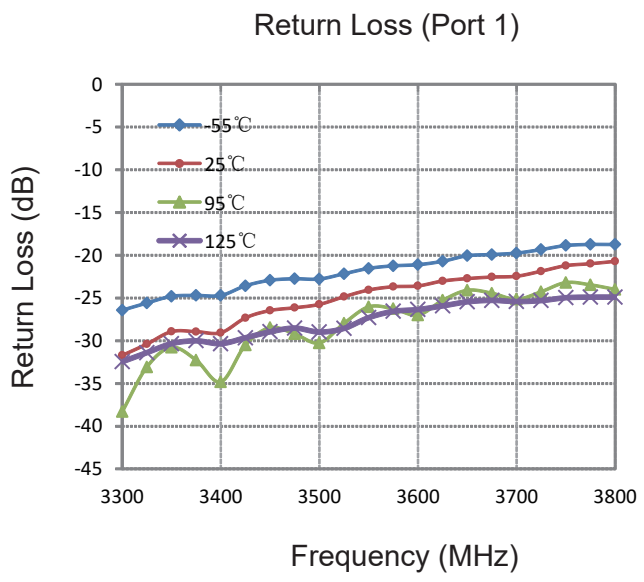

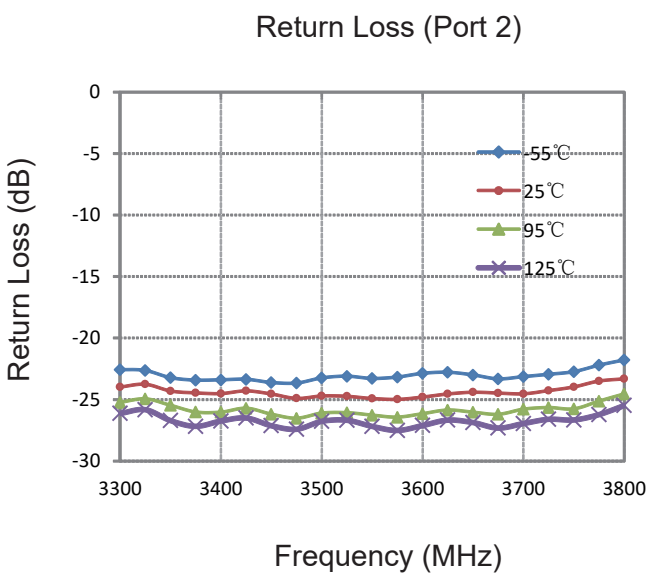

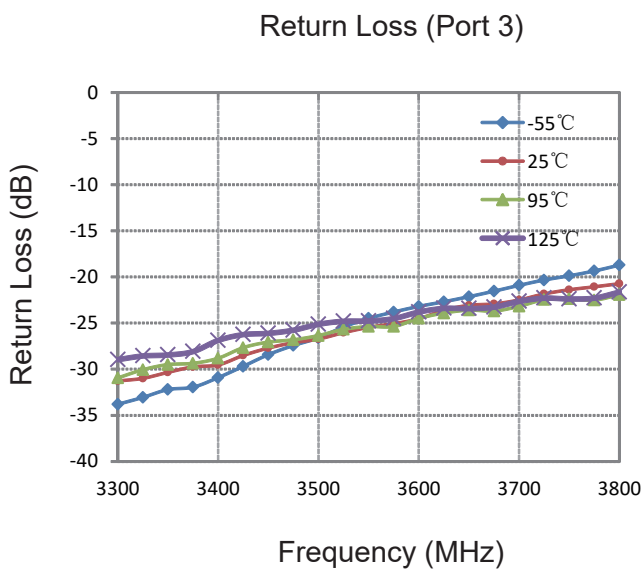

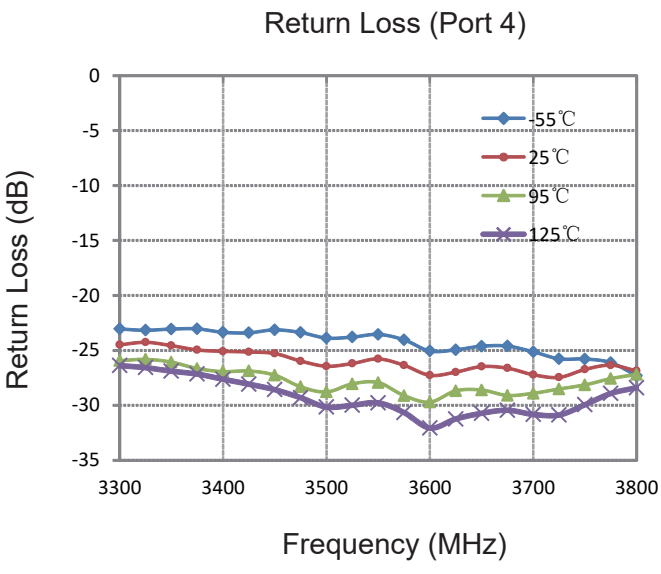

Yantel Corporation

Add: 3F, Building 3, Southern District 2 of Zhongguan Honghualing Industrial Park, Xili, Nanshan, Shenzhen, China
Tel: 86-755-8355-1886 Fax: 86-755-8355-2533
For detailed performance specs & shopping online see Yantel web site : www.yantel-corp.com

HC3500P03H

Hybrid Coupler 3 dB, 90°

Rev A1

Typical Performance (-55°C,25°C,95°C,125°C: 3300-3800 MHz)

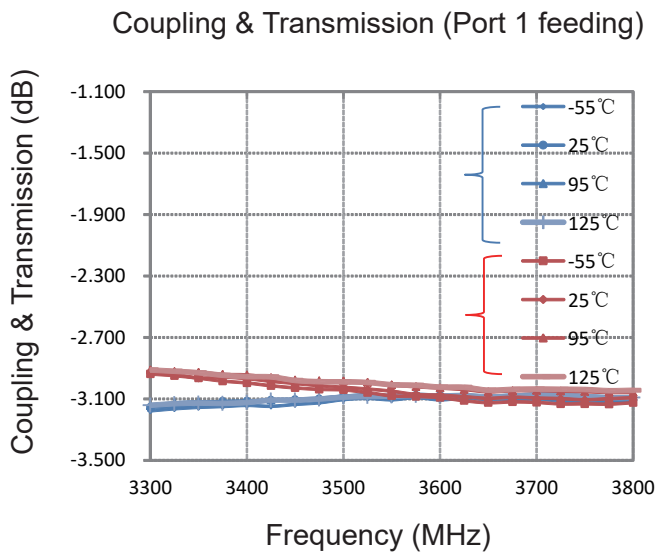

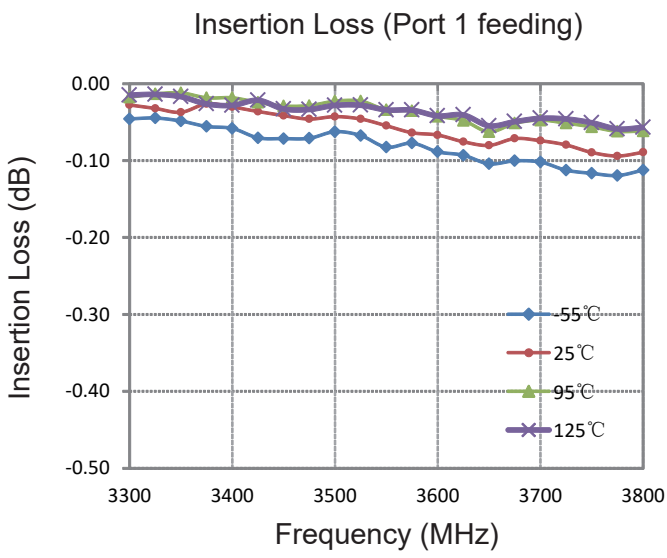

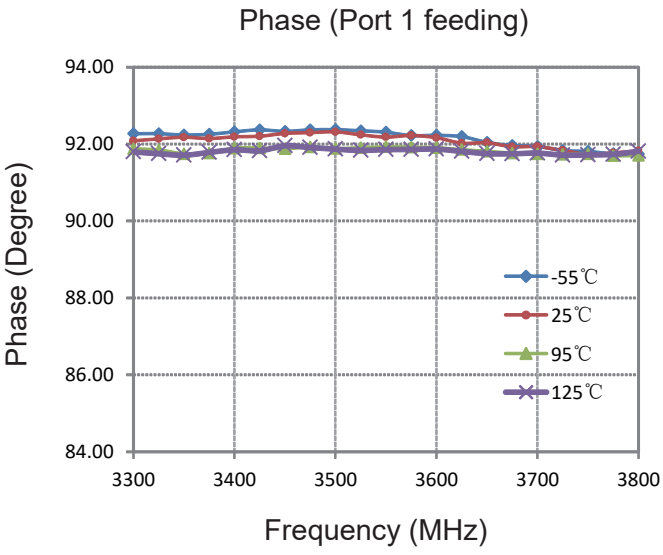

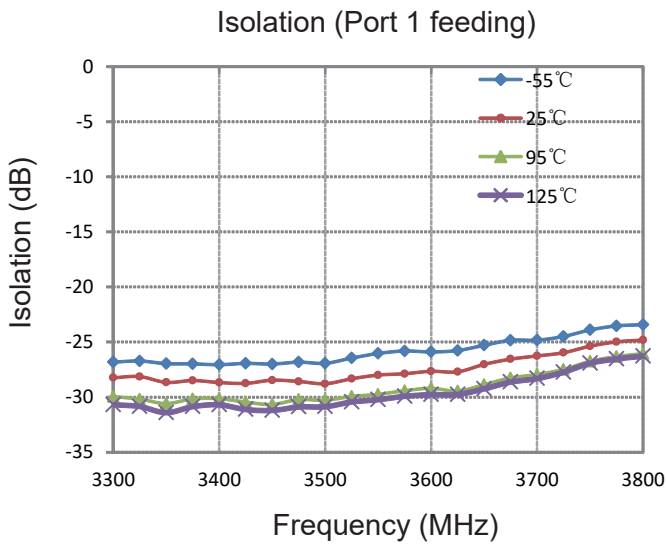

Yantel Corporation

Add: 3F, Building 3, Southern District 2 of Zhongguan Honghualing Industrial Park, Xili, Nanshan, Shenzhen, China
Tel: 86-755-8355-1886 Fax: 86-755-8355-2533
For detailed performance specs & shopping online see Yantel web site : www.yantel-corp.com

HC3500P03H

Hybrid Coupler 3 dB, 90°

Rev A1

Definition of Measured Specifications

Parameter	Definition	Mathematical Representation
VSWR (Voltage Standing Wave Ratio)	The impedance match of the coupler to a 50Ω system. A VSWR of 1:1 is optimal.	$VSWR = \frac{V_{max}}{V_{min}}$ Vmax = voltage maxima of a standing wave Vmin = voltage minima of a standing wave
Return Loss	The impedance match of the coupler to a 50Ω system. Return Loss is an alternate means to express VSWR.	Return Loss (dB)= $20\log \frac{VSWR+1}{VSWR-1}$
Insertion Loss	The input power divided by the sum of the power at the two output ports.	Insertion Loss(dB)= $10\log \frac{P_{in}}{P_{cpl}+P_{transmission}}$
Isolation	The input power divided by the power at the isolated port.	Isolation(dB)= $10\log \frac{P_{in}}{P_{iso}}$
Phase Balance	The difference in phase angle between the two output ports.	Phase at coupled port – Phase at transmisson port
Amplitude Balance	The power at each output divided by the average power of the two outputs.	$10\log \frac{P_{cpl}}{\left(\frac{P_{cpl}+P_{transmission}}{2}\right)}$ and $10\log \frac{P_{transmission}}{\left(\frac{P_{cpl}+P_{transmission}}{2}\right)}$

Test Method

1. Calibrating your vector network analyzer.
2. Connect the VNA 4 Port to DUT respectively.
3. Measure the data of coupling through port 1 to port 4(S41).
4. Measure the data of transmission through port 1 to port 3(S31).
5. Measure the data of isolation through port 1 to port 2(S21).
6. Measure the data of phase port 4 & port 3(port 1 feeding).
7. Measure the data of return loss port 1, port 2, port 3 & port 4.
8. According to the above data to calculate insertion loss, amplitude balance & phase.

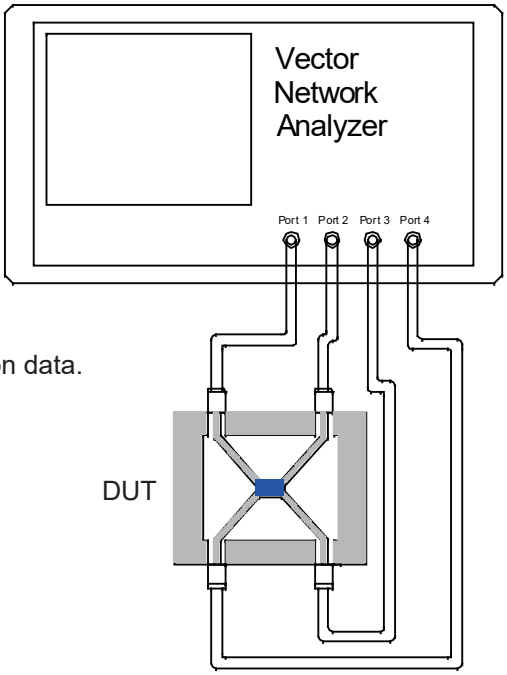

Note:

1. When calculating insertion loss at room temperature, demo board loss should be removed from both coupling & transmission data.

Please refer to the below table for demo board loss :

Frequency Range(MHz)	Demo Board Loss (dB) @25℃
470-860	0.07
800-1000	0.10
1200-1700	0.15
1700-2000	0.15
2000-2300	0.20
2300-2700	0.25

Yantel Corporation

Add: 3F, Building 3, Southern District 2 of Zhongguan Honghualing Industrial Park, Xili, Nanshan, Shenzhen, China
Tel: 86-755-8355-1886 Fax: 86-755-8355-2533
For detailed performance specs & shopping online see Yantel web site : www.yantel-corp.com

Recommended PCB Layout

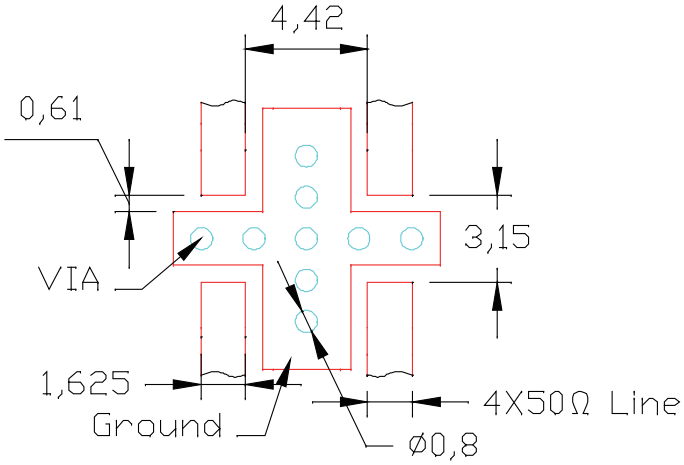

NOTE:

1. 50Ω line width is shown above designing from RO4350B dieletric thickness 0.762mm; copper 1 OZ
2. Bottom side of the PCB is continuous ground plane.
3. All dimensions shown in mm.

Reflow Profile

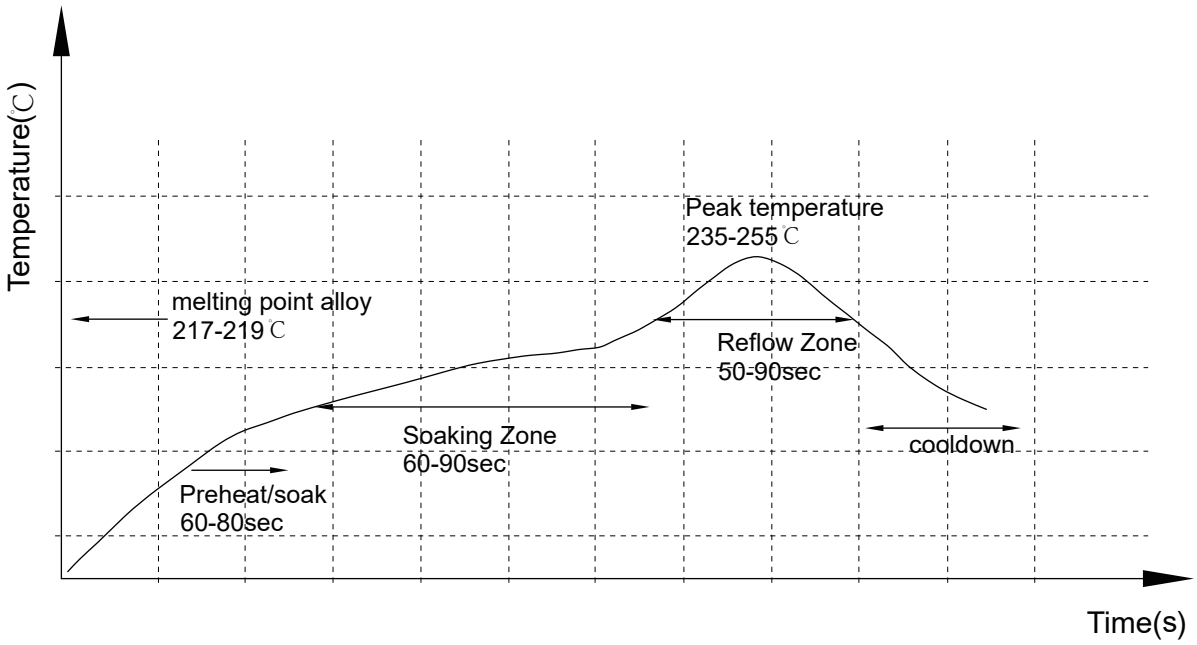

Add: 3F, Building 3, Southern District 2 of Zhongguan Honghualing Industrial Park, Xili, Nanshan, Shenzhen, China
Tel: 86-755-8355-1886 Fax: 86-755-8355-2533
For detailed performance specs & shopping online see Yantel web site : www.yantel-corp.com

Reliability Test Flow

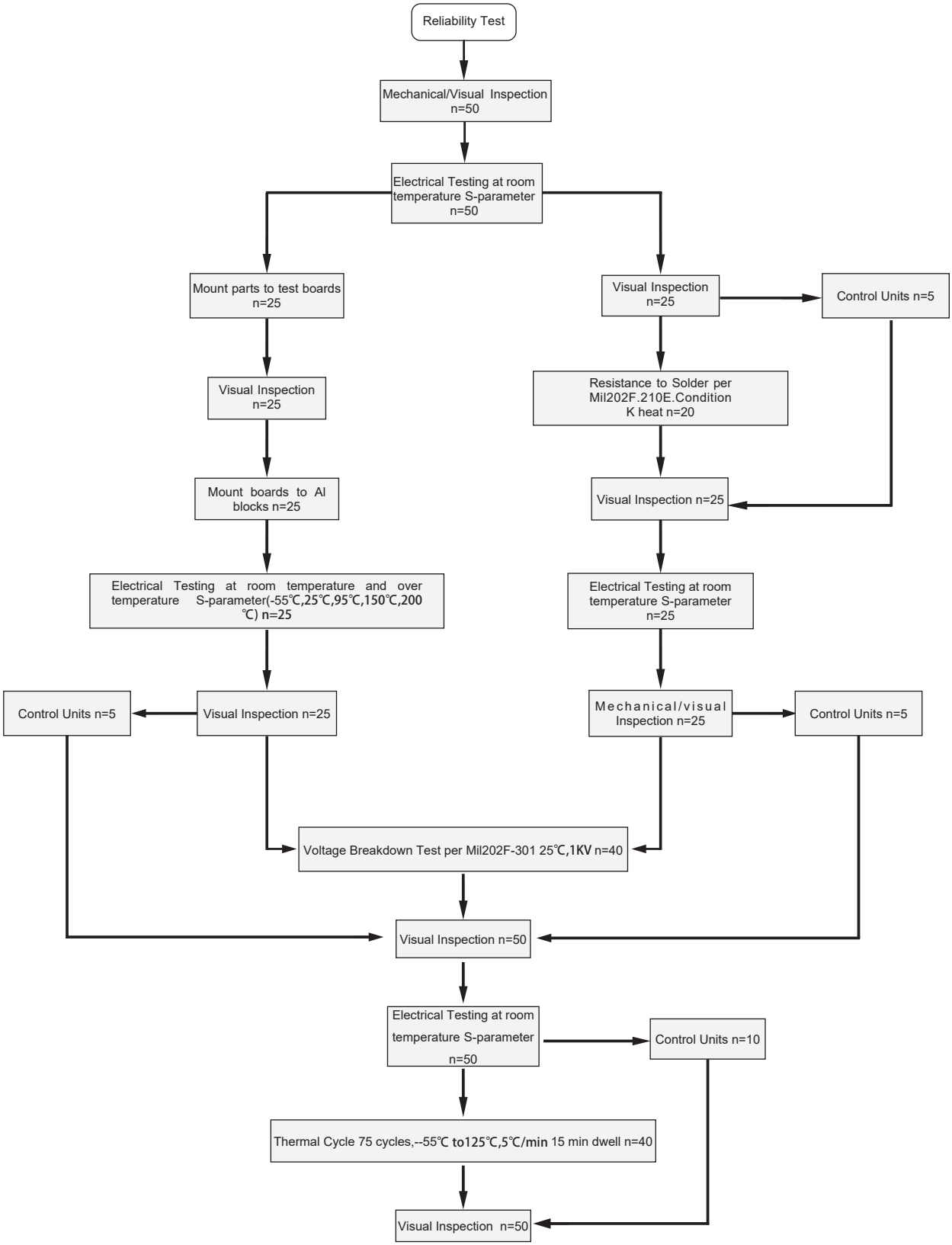

Reliability Test Flow

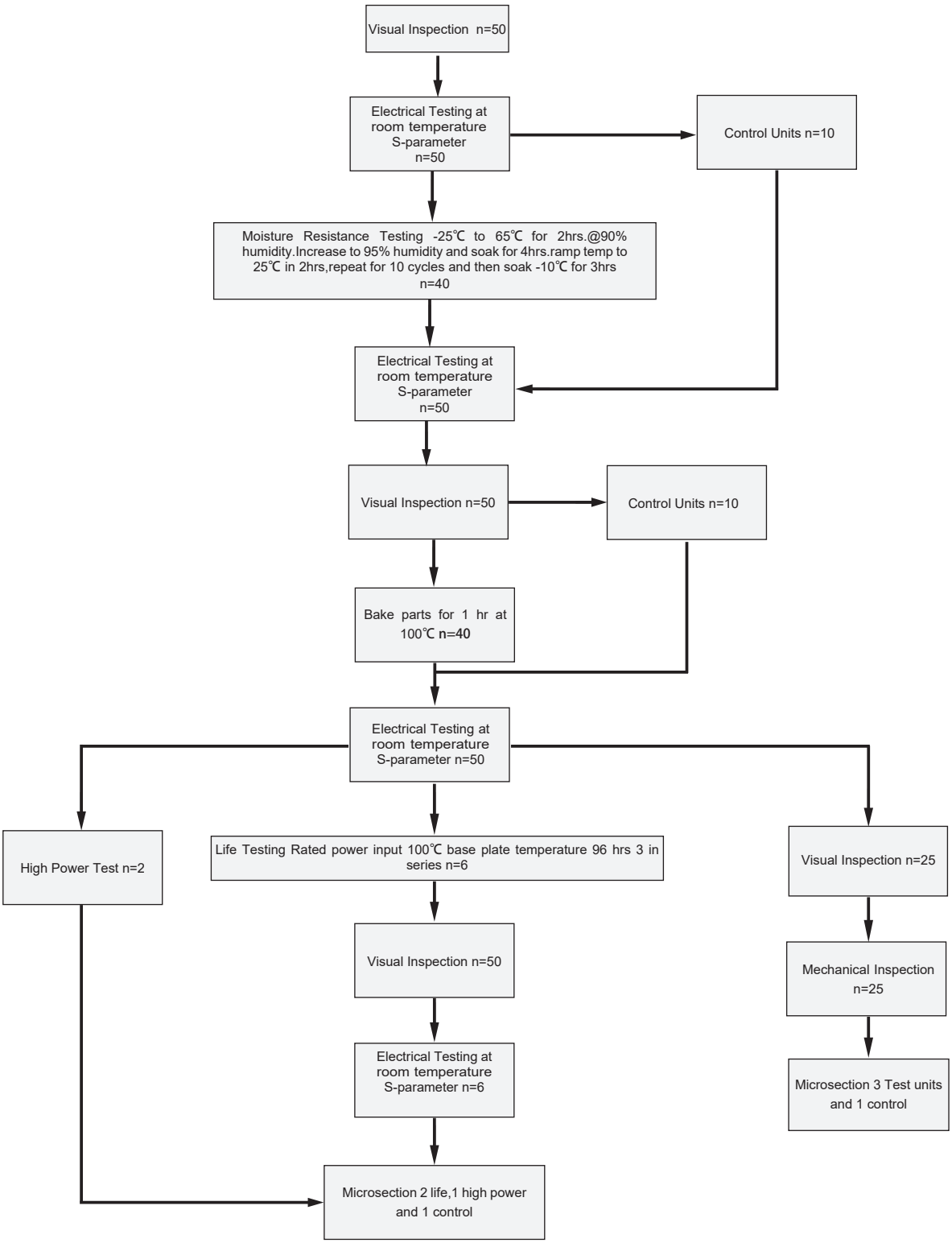

HC3500P03H

Hybrid Coupler 3 dB, 90°

Rev A1

Tape and Reel Drawing

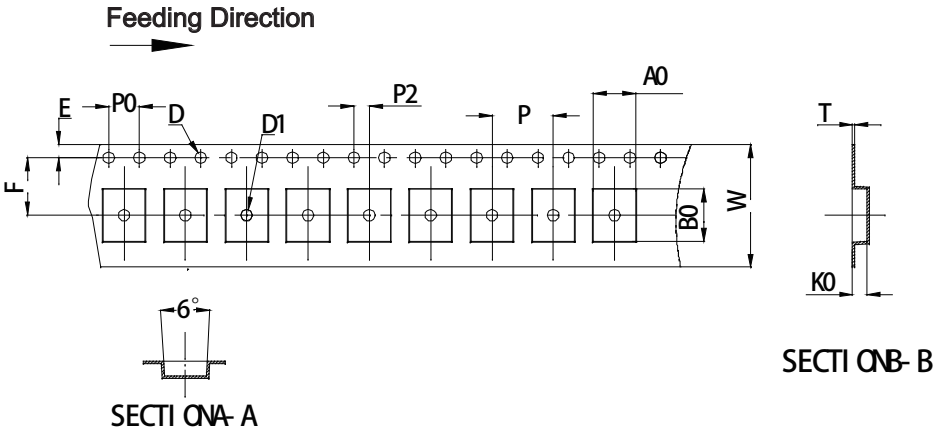

Notice:

A.10 Sprocket hole pitch cumulative tolerance is 0.2mm.

B. Carrier camber shall be not more than 1mm per 100mm through a length of 250mm.

C. All dimensions meet EIA-418-B requirements.

D. A0 & B0 measured as indicated.

E. K0 measured from a place on the inside bottom of the pocket to top surface of carrier.

F. Material: PE 100

G. Thickness: 0.30±0.05mm

H. 1000 units (maximum) / T&R

ITEM	W	A0	B0	K0	P	F	E	D	D1	P0	P2	T	7″
DIM(mm)	16.0	5.50	6.80	2.30	8.00	7.50	1.75	1.50	1.50	4.00	2.00	0.30	P/R
TOLE	+0.30 -0.30	+0.10 -0.10	+0.10 -0.10	+0.10 -0.10	+0.10 -0.10	+0.10 -0.10	+0.10 -0.10	+0.10 -0.00	+0.10 -0.00	+0.10 -0.10	+0.10 -0.10	+0.05 -0.05	1000pcs

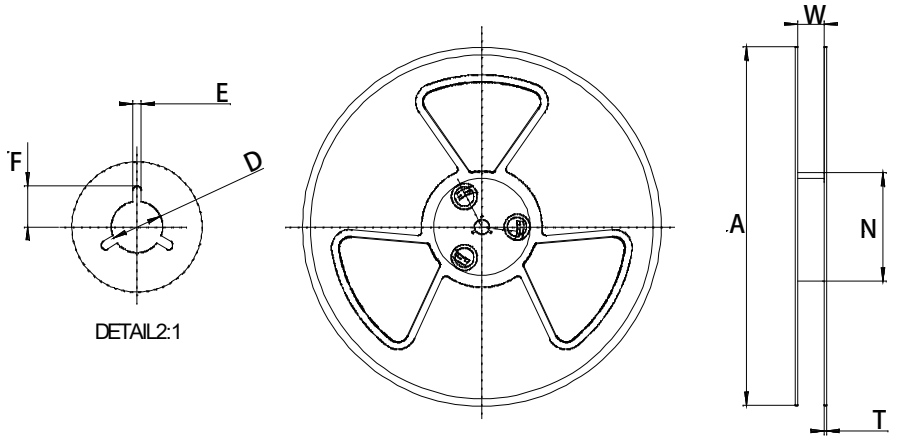

Symbol	Dimensions	
	(mm)	(inch)
W	16.5±0.4	0.65
A	177±0.5	7.0
N	63±0.3	2.48
T	1.8±0.2	0.071
E	2.1±0.3	0.083
F	10.75±0.3	0.423
D	13.5+0.5/-0.2	0.531

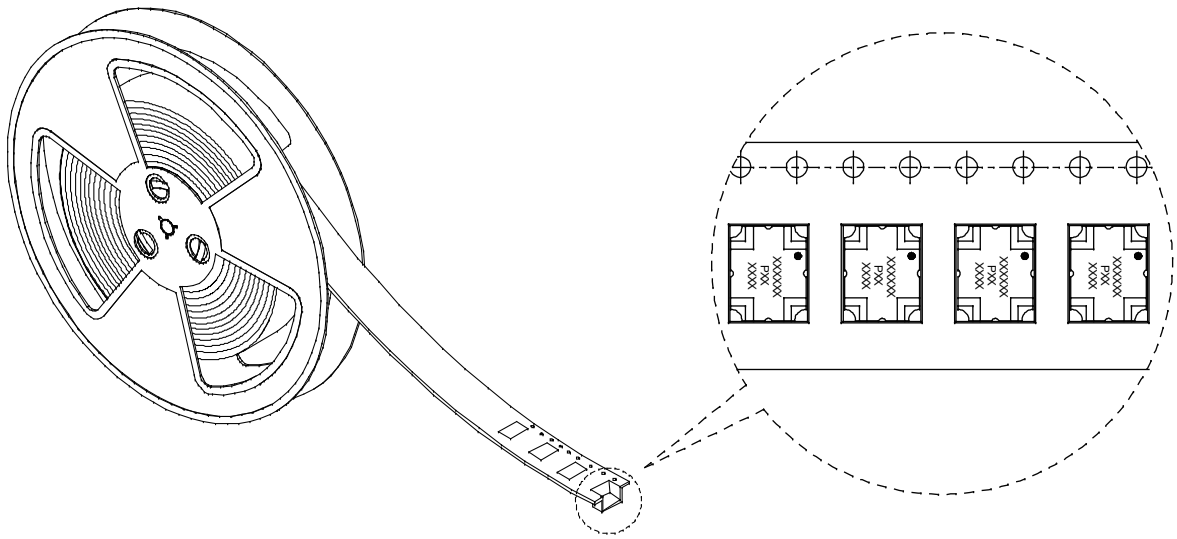

Yantel Corporation

Add: 3F, Building 3, Southern District 2 of Zhongguan Honghualing Industrial Park, Xili, Nanshan, Shenzhen, China

Tel: 86-755-8355-1886 Fax: 86-755-8355-2533

For detailed performance specs & shopping online see Yantel web site : www.yantel-corp.com