Data Sheet
PD3550U03-110
Power Divider/Combiner
2-Way 0° 50Ω 3.3-3.8 GHz

Features

- Small Size (2×2mm DFN package)
- Passive RF IC, no need external DC power supply
- No need external 100 Ω resistor
- Very Low Loss
- Tight Amplitude Balance
- High Isolation
- Low VSWR
- Good Repeatability
- Tape & Reel
- Operating Temperature -40℃~85℃
- Power handling
  - 2 Watts as a divider
  - 1 Watts as a combiner

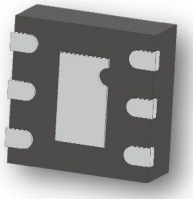

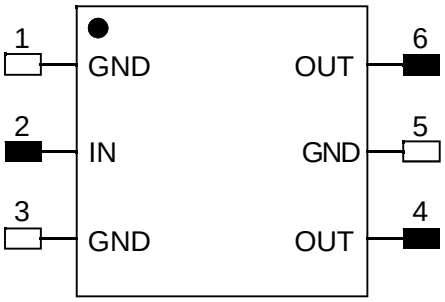

TOP VIEW

Applications

- Wireless communications
- WLAN / WiMax
- SAT Radio
- ISM band instrument
- Information System for Automotive Safety

Notes:

1.This part has passed through 100% RF test.

2. Suggest to add Capacitors of DC Blocker between Pins(with black color) and external circuit to prevent DC signal entry to guarantee parts normal work.

3. Suggest to add a TVS Diode in parallel between Eletrode (with black color) and Capacitor of DC Blocker to provide ESD protection for the product. TVS Diode use ON Semiconductor's ESD9101 is recommended.

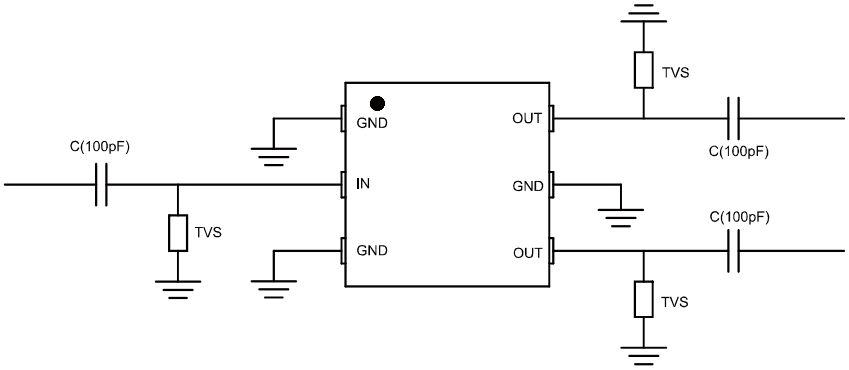

ESD Rating

Human Body Model (HBM): ≤ 800V in accordance with ANSI/ESD STM 5.1 - 2001

Machine Model (MM): ≤ 100V in accordance with ANSI/ESD STM 5.2 - 1999

Yantel Corporation

Add: 3F, Building 3, Southern District 2 of Zhongguan Honghualing Industrial Park, Xili, Nanshan, Shenzhen, China

Tel: 86-755-8355-1886 Fax: 86-755-8355-2533

For detailed performance specs & shopping online see Yantel web site : www.yantel-corp.com

Data Sheet
PD3550U03-110
Power Divider/Combiner
2-Way 0° 50Ω 3.3-3.8 GHz

Electrical Specifications at 25º C

Parameter	Symbol	Min	Typ	Max	Unit
Frequency Range	F	3300		3800	MHz
Insertion Loss (Above 3dB)	I_L		0.35	0.5	dB
Isolation	Isol	17	20		dB
Phase balance	$ø_{bal}$		1.0	2.0	deg
Amplitude balance	A_{bal}		±0.1	±0.2	dB
Input VSWR			1.3	1.55	
Output VSWR			1.2	1.2	

Typical Performance (-40°C, 25°C, 85°C, 125°C: 3300-3800 MHz)

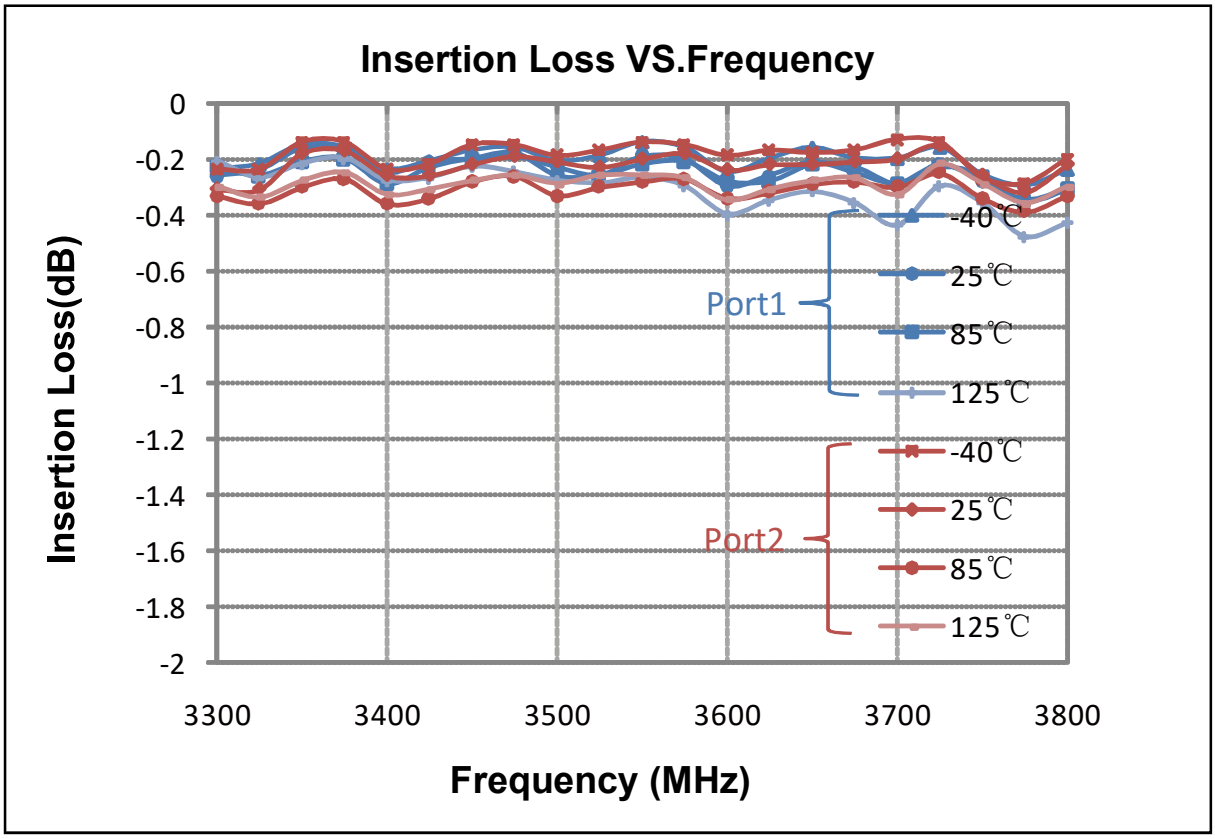

Yantel Corporation

Add: 3F, Building 3, Southern District 2 of Zhongguan Honghualing Industrial Park, Xili, Nanshan, Shenzhen, China
Tel: 86-755-8355-1886 Fax: 86-755-8355-2533

For detailed performance specs & shopping online see Yantel web site : www.yantel-corp.com

Data Sheet
PD3550U03-110
Power Divider/Combiner
2-Way 0° 50Ω 3.3-3.8 GHz

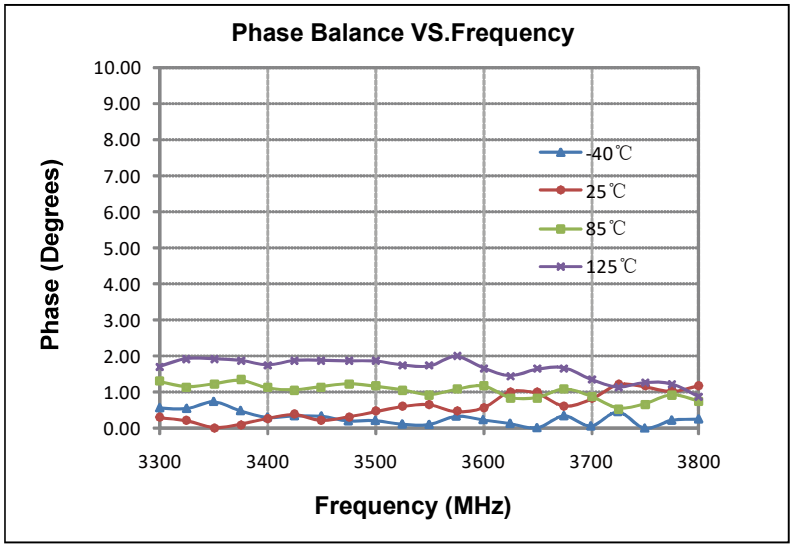

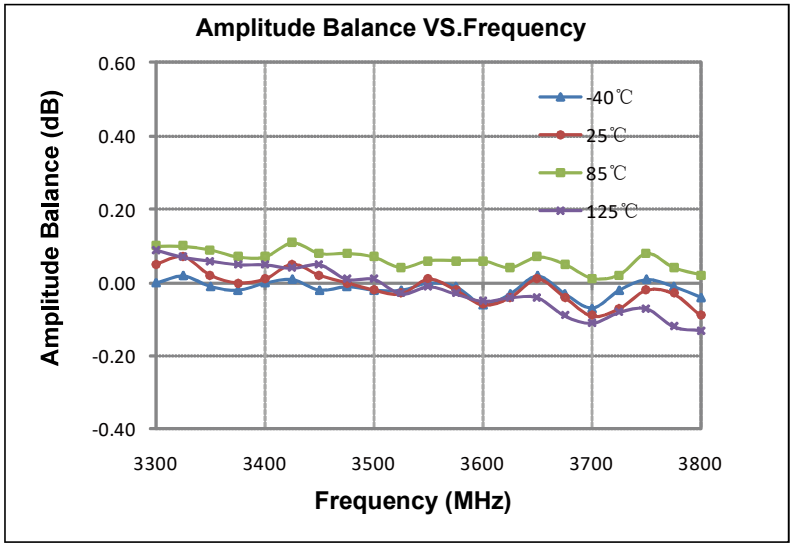

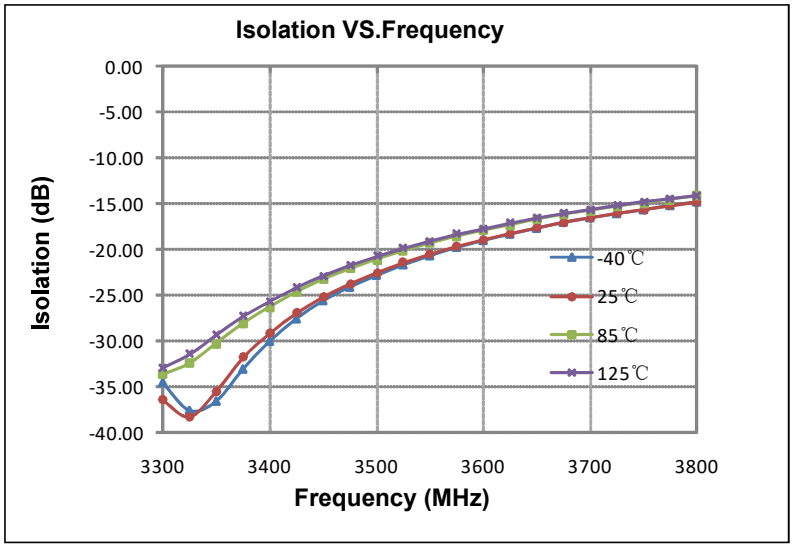

Yantel Corporation

Add：3F, Building 3, Southern District 2 of Zhongguan Honghualing Industrial Park, Xili, Nanshan, Shenzhen, China
Tel：86-755-8355-1886 Fax：86-755-8355-2533
For detailed performance specs & shopping online see Yantel web site : www.yantel-corp.com

Data Sheet
PD3550U03-110
Power Divider/Combiner
2-Way 0° 50Ω 3.3-3.8 GHz

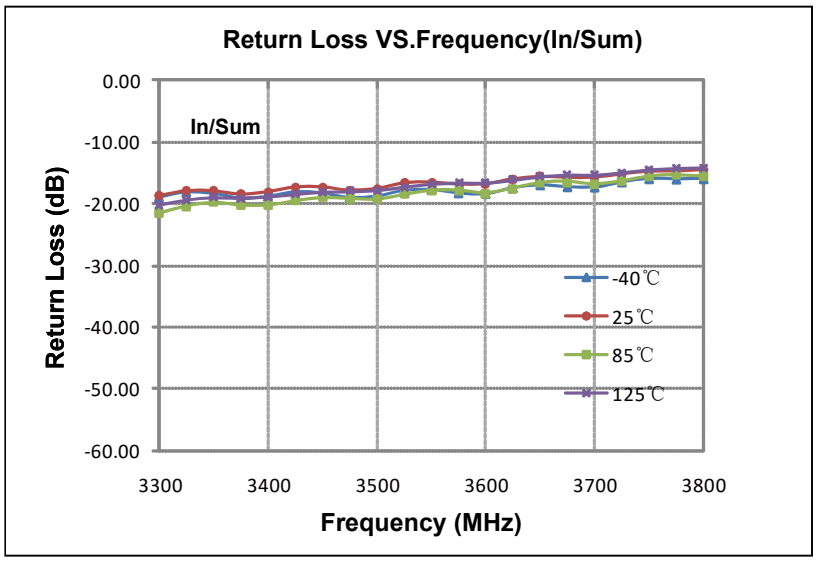

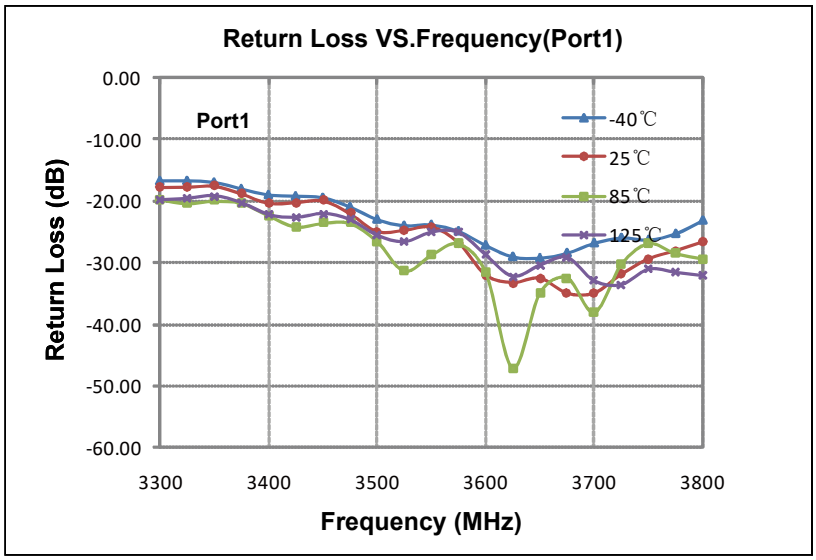

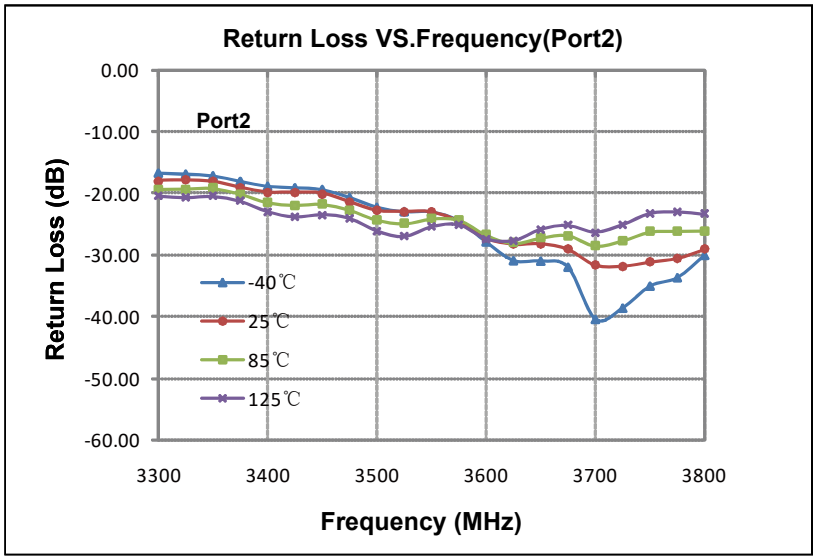

Yantel Corporation

Add: 3F, Building 3, Southern District 2 of Zhongguan Honghualing Industrial Park, Xili, Nanshan, Shenzhen, China
Tel: 86-755-8355-1886 Fax: 86-755-8355-2533

For detailed performance specs & shopping online see Yantel web site : www.yantel-corp.com

Data Sheet
PD3550U03-110
Power Divider/Combiner
2-Way 0° 50Ω 3.3-3.8 GHz

Outline Drawing

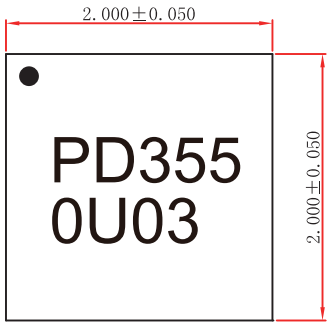

TOP VIEW

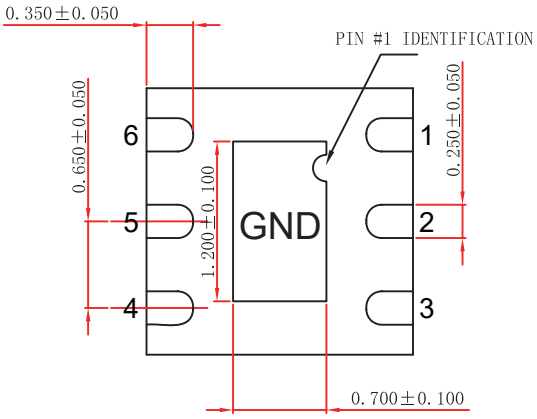

BOTTOM VIEW

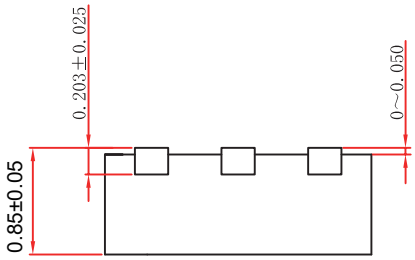

SIDE VIEW

Land Pattern

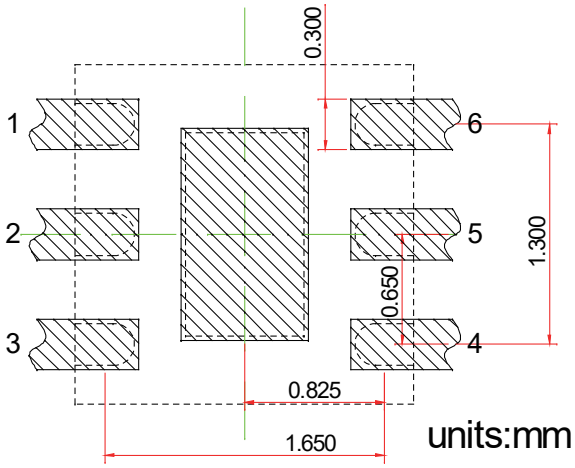

Recommended Land Pattern
Top View

Notes: All dimensions show in millimeters

Pin Out

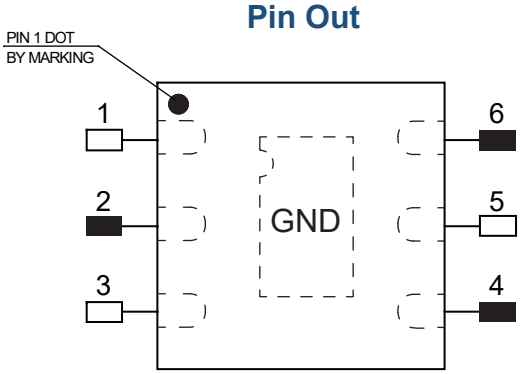

TOP VIEW

Notes:
1.Require to add Capacitors of DC Blocker between Pins(with black color) and external circuit to prevent DC signal entry to guranteeparts normal work.
2.This part has passed through 100% RF test.

Pin #	Connection
1	GND
2	IN
3	GND
4	OUT
5	GND
6	OUT
Center Pad	GND

Yantel Corporation
Add: 3F, Building 3, Southern District 2 of Zhongguan Honghualing Industrial Park, Xili, Nanshan, Shenzhen, China
Tel: 86-755-8355-1886 Fax: 86-755-8355-2533